NOR Operation

- This gate performs the logical NOR operation.
- The NOR operation is the inverse (complement) of OR operation which indicates that the output of logical OR operation will be inverted.
- i.e. If the output of logical OR operation is 1(High) then the output of NOR operation is 0(Low).
- NOR is the same as the <u>OR</u> gate symbol *except* that it has a small circle on the output. This small circle represents the inversion operation.

NOR Operation

Therefore the output expression of the two input NOR gate is:

- X = (A + B)'
- X = $\overline{A} \bullet \overline{B}$ [using De Morgan's theorem]

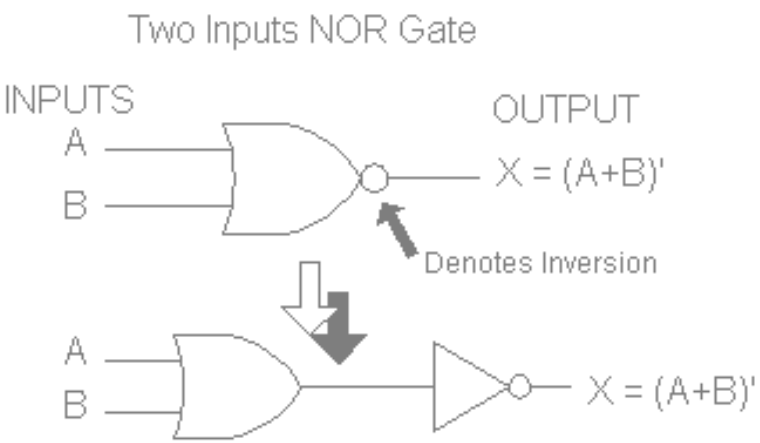

INPUTS		OR	NOR
A	B	X = A+B	X= (A+B)'
0	0	0	1
0	1	1	0
1	0	1	0
1	1	1	0

NAND Operation

- The NAND gate is used to perform the logical NAND operation.
- The NAND operation is the inverse (Complement) of AND operation which indicate that the output of logical AND operation will be inverted.
- The term NAND is formed by the concatenation NOT-AND.
- The symbol of NAND gate is almost same as AND gate except that it has also a small circle on the output.

NAND Operation

- NAND is the same as the AND gate symbol *except* that it has a small circle on the output. This small circle represents the inversion operation.
- Therefore the output expression of the two input NAND gate is:
- X = (AB)'

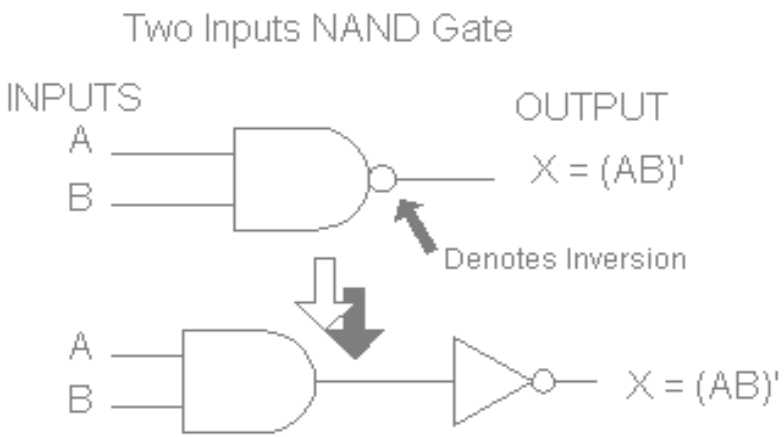

INPUTS		AND	NAND
A	B	X = AB	X= (AB)`
0	0	0	1
0	1	0	1
1	0	0	1
1	1	1	0

Determining Output Level from a Diagram

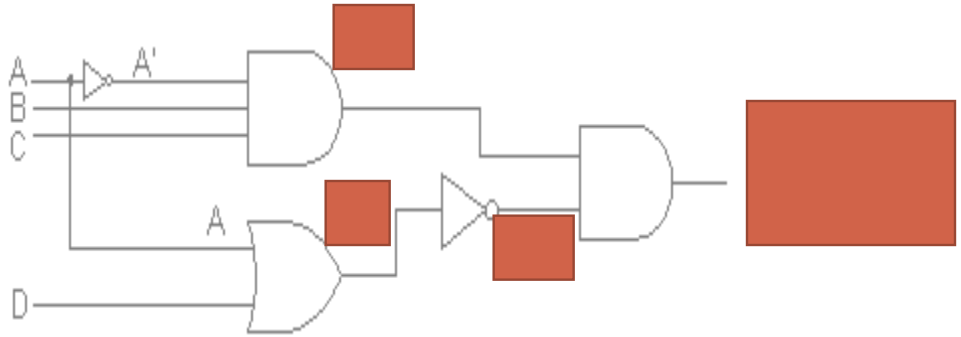

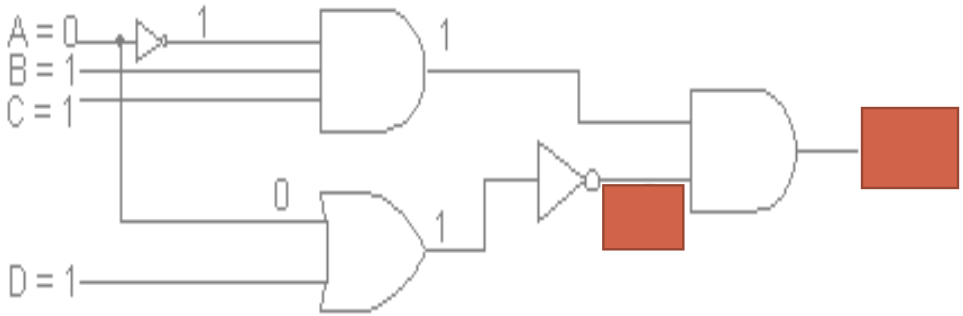

Universality of NAND Gate

- It is possible to implement *any* logic expression using only <u>NAND</u> gates and no other type of gate.
- This is because NAND gates, in the proper combination, can be used to perform each of the Boolean operations OR, AND, and INVERT.

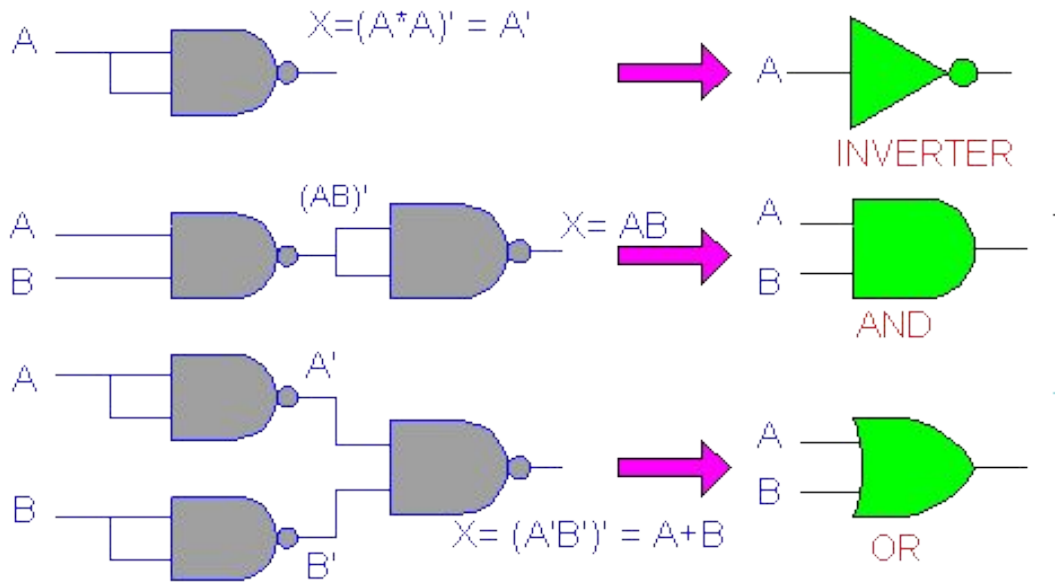

Universality of NOR Gate

- In a similar manner, it can be shown that NOR gates can be arranged to implement any of the Boolean operations.

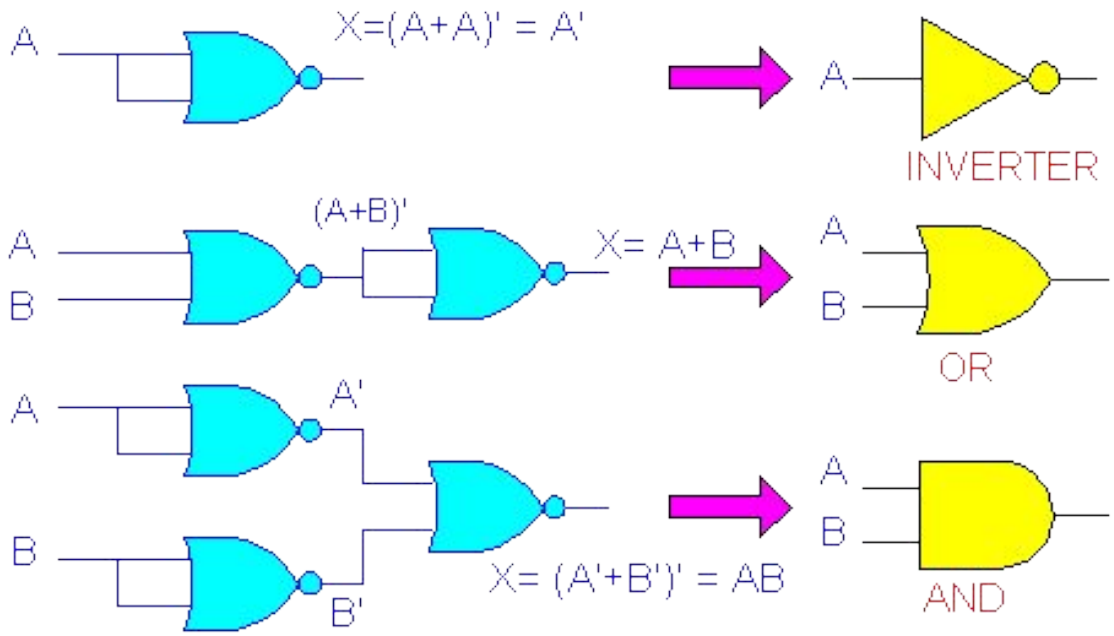

Executive OR gate (XOR)

- This gate is usually formed form the combination of the other logic gates.
- This is not a basic logic gate but it has wide application in computer arithmetic circuit.
- The truth table and symbol of XOR gate are shown below,

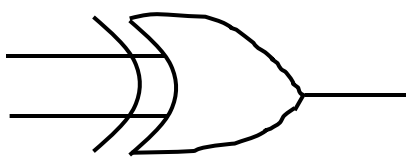

Figure 13(a): Symbol of XOR gate.

XOR Gate

Characteristics:

- This circuit produces a high output whenever the two inputs are at opposite levels.
- An EX-OR gate has only two inputs; there are no three-input or four-input EX-OR gates.

Two input Executive OR gate

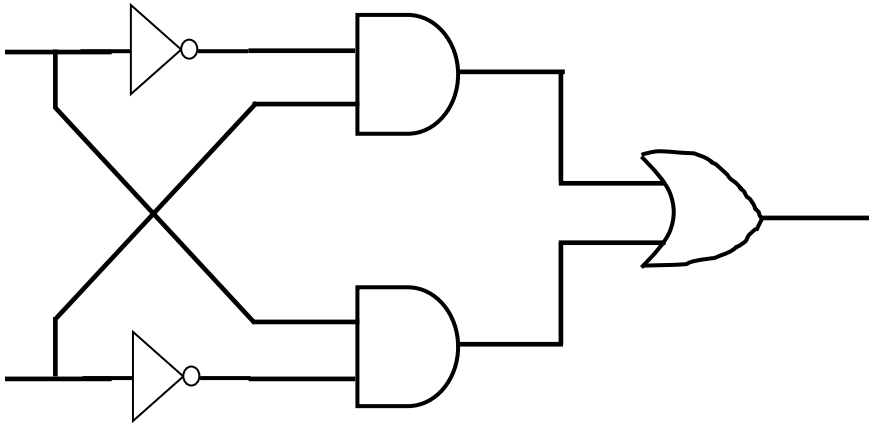

Inputs		Outputs
A	B	X=A+B
0	0	0
0	1	1
1	0	1
1	1	0

Figure : Truth table of XOR gate.

Operation?

The output expression can be written as

$$X = \overline{A}B + A\overline{B}$$

Rearrange the previous equation

$$X = \overline{A}B + A\overline{B}$$

$$= A\overline{A} + \overline{A}B + A\overline{B} + B\overline{B} \qquad A\overline{A} = B\overline{B} = 0$$

$$= \overline{A}(A+B) + \overline{B}(A+B)$$

$$= (A+B)(\overline{A}+\overline{B})$$

$$= (A+B)(\overline{AB}) \qquad \text{DeMorgan's theorem}$$

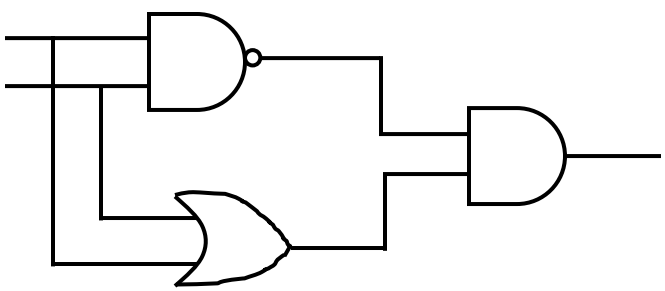

$$X = (A+B)(\overline{AB})$$

Example:

Construct the exclusive OR gate circuit using only NAND gates.

Solution:

- The EX-OR circuit can be constructed using only NAND gates.
- This means that there is no OR operation here.
- For that case it is required to remove OR operator from the output expression.

Ex-OR gate circuit using only NAND gates.

Rearrange the previous equation

$$X = \overline{A}B + A\overline{B}$$

$$= A\overline{A} + \overline{A}B + A\overline{B} + B\overline{B} \qquad A\overline{A} = B\overline{B} = 0$$

$$= (\overline{A} + \overline{B})(A + B)$$

$$X = (A + B)(\overline{AB})$$

$$= \{A(\overline{AB})\} + \{B(\overline{AB})\}$$

$$= \overline{\overline{\{A(\overline{AB})\} + \{B(\overline{AB})\}}} \qquad \overline{\overline{A}} = A$$

$$= \overline{[\overline{\{A(\overline{AB})\}} \bullet \overline{\{B(\overline{AB})\}}]}$$

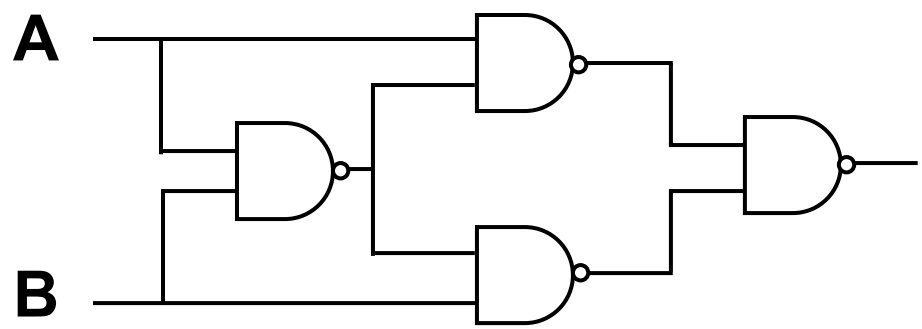

Figure : Ex-OR circuit using only NAND gates.

Ex-OR gate circuit using only NOR gates.

Rearrange the previous equation

$$X = \overline{A}B + A\overline{B}$$

$$= A\overline{A} + \overline{A}B + A\overline{B} + B\overline{B}$$

$$A\overline{A} = B\overline{B} = 0$$

$$= (\overline{A} + \overline{B})(A + B)$$

$$= \overline{\overline{(A + B)(\overline{A} + \overline{B})}}$$

$$= \overline{(A + B)} + \overline{(\overline{A} + \overline{B})}$$

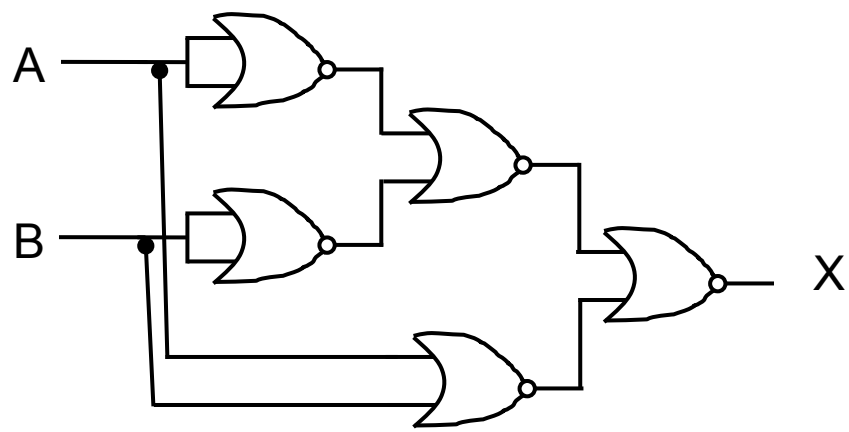

Figure : Ex-OR circuit using only NOR gates.

Alternate Logic Gate Representations
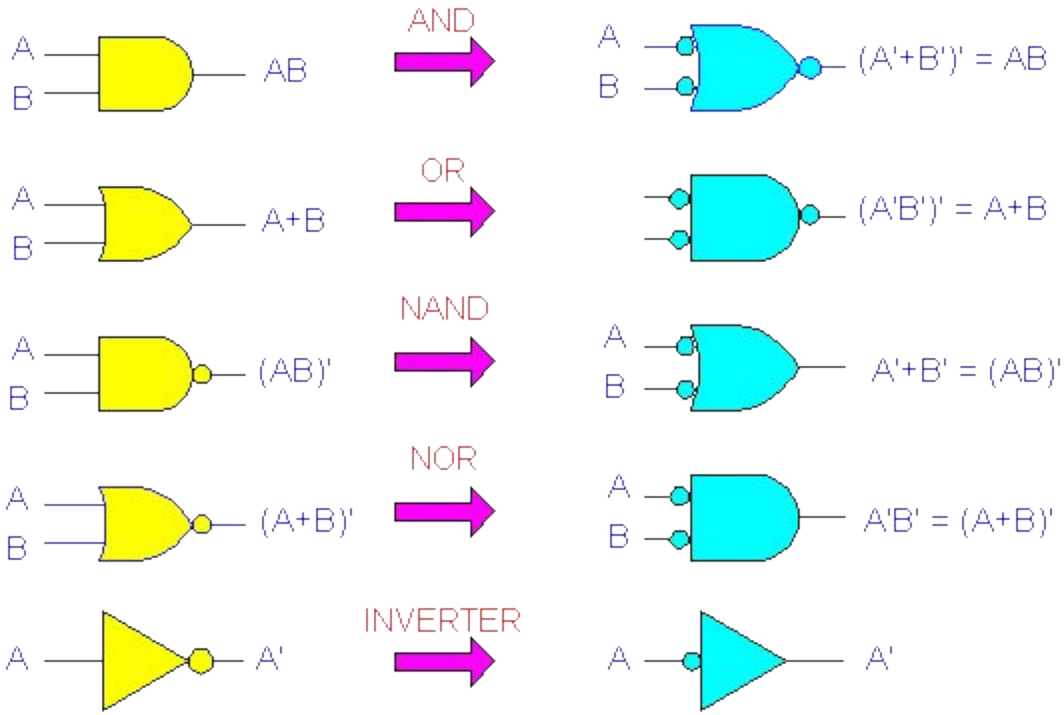
The left side shows the standard symbol for each logic gate, and the right side shows the **alternate symbol**.